Código artículo 86.OW06.4230.03

IEC 60598 | GB 7000 | IP66 | III | IK06 | ta45° C | S. Cx 0.038m²

1. Place the light on the mounting surface.

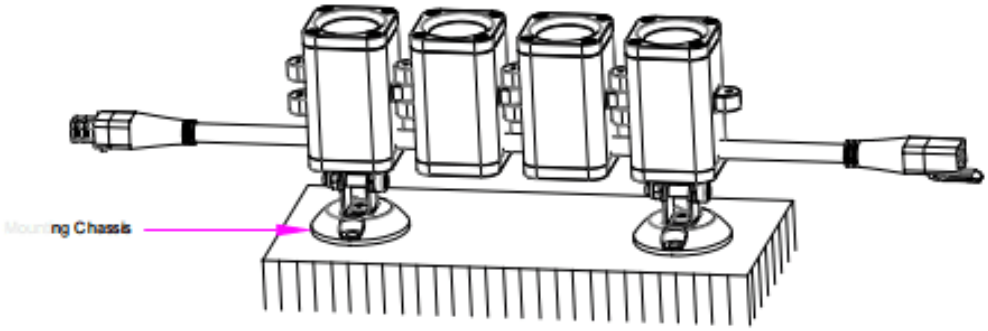

2. Fix the light to the mounting surface with self-tapping screws.

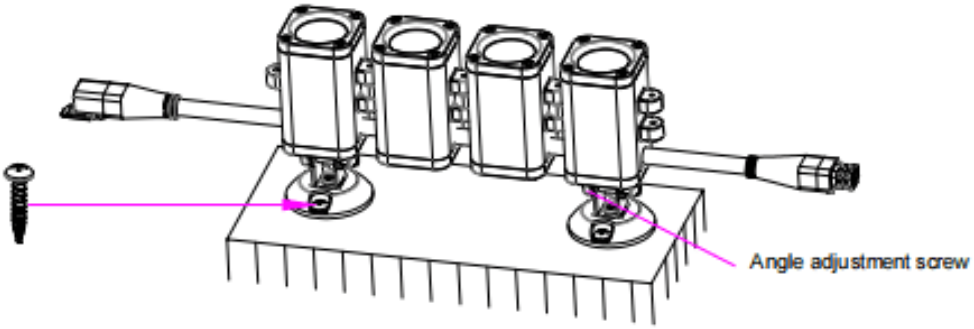

3. Light can be adjusted 140° from side to side.

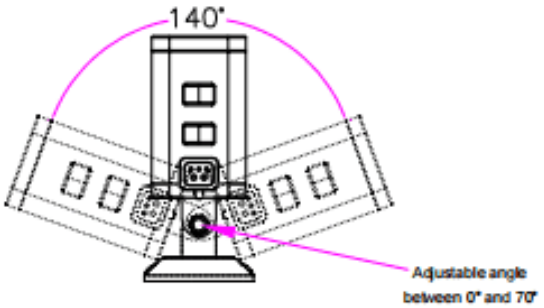

4. Installation position of each light where the first and last male and female waterproof connectors.

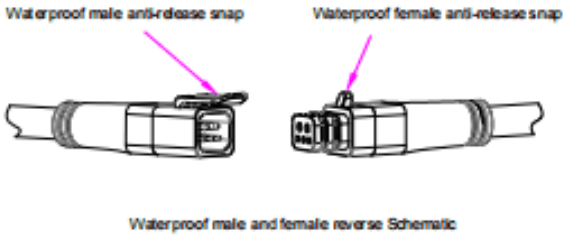

5. Waterproof connector need inserted into each other according to the direction until the clips snap into the slots.

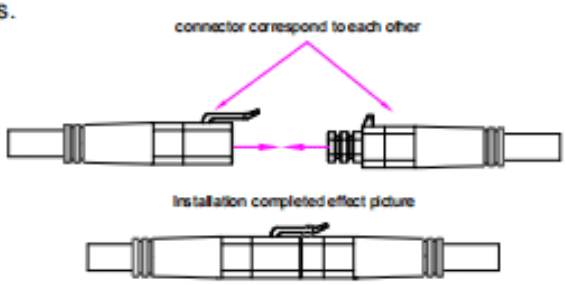

6. Pry the male connector upwards to prevent the release of the buckle and then apply force to the male and female connector horizontal movement in both directions to make them separate.

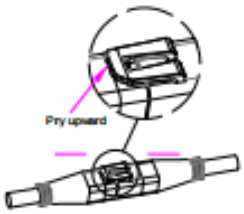

Llamp wiring diagram, wiring mode is series

Lighting wiring diagram:

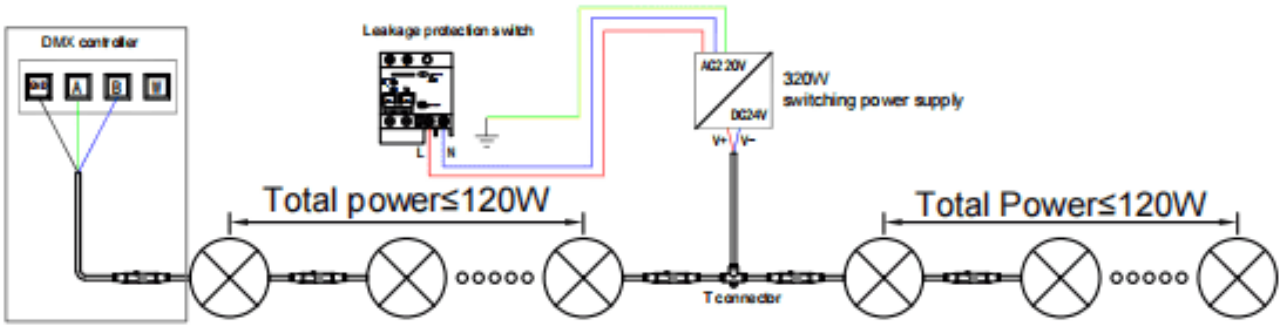

Remark:Single color don't need controller

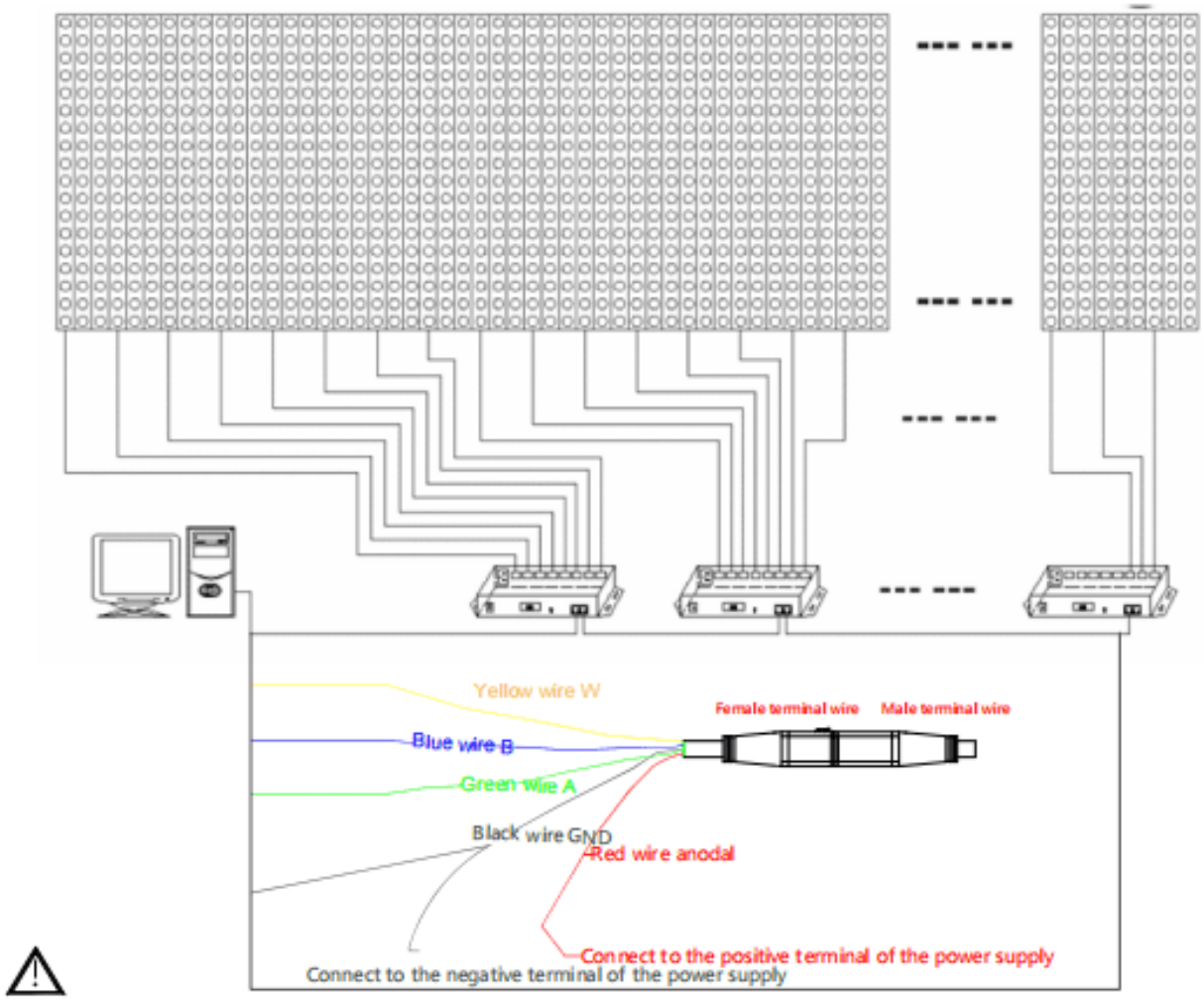

1. Need to consider the diameter of main cable when several fixtures connect together, and the loaded current of main cable need to more than the total current of all fixtures.

2.Need to choose the suitable leakage protection switch for power distribution, also need to pay attention on fixture driver, cable length and wet environment might increase leakage current.